USN | | | | | | | | | | [22CE33]

THIRD SEMESTER B.Tech EXAMINATION, DECEMBER -2023

MECHANICS OF MATERIALS

Time: 3 Hours Maximum **Marks: 100**

Instructions: **i.** Missing data may be suitably assumed.

ii. Answer All Questions

PART-A **5 X 2=10**

1.	**a.**	Draw Stress-Strain diagram showing engineering and true stress-strain curves.	L2	CO1	**02**
	b.	Draw any three types of beams, supports and loads.	L2	CO2	**02**
	c.	What is section modulus? Write formula for Section modulus of rectangular and circular sections.	L2	CO3	**02**
	d.	A solid shaft of 150 mm diameter is used to transmit torque.Find the maximum torque transmitted by the shaft if the maximum shear stress induced to the shaft is 45 N/mm^2	L3	CO4	**02**
	e.	Define principal planes and principal stresses. Also define Mohr's circle.	L2	CO5	**02**
		PART-B	**6 X 5=30**		
2.	**a.**	The ultimate stress, for a hollow steel column which carries an axial load of 1.9 MN is 480 N/mm^2. If the external diameter of the column is 200 mm, determine the internal diameter. Take the factor of safety as 4.	L3	CO1	**05**
		OR			
	b.	An axial pull of 35000 N is acting on a bar consisting of three lengths as shown in figure below. If the Young's modulus = 2.1 × 105 N/mm^2, determine, **i.** stresses in each section **ii.** total extension of the bar.	L3	CO1	**05**

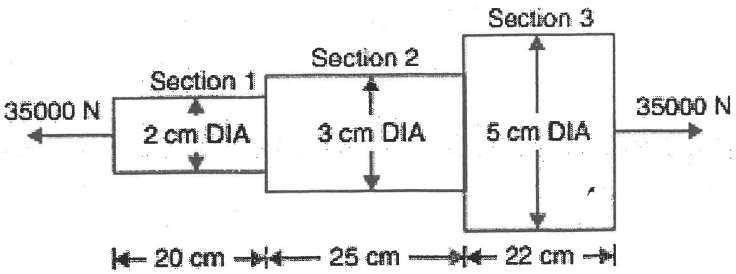

Figure 2

3.	a.	A cantilever of length 4 m carries a gradually varying load, zero at the free end to 2 kN/m at the fixed end. Draw the S.F. and B.M. diagrams for the cantilever.	L3	CO2	**05**
		OR			
	b.	A simply supported beam of length 6 m, carries point load of 3kN and 6 kN at distances of 2 m and 4 m from the left end. Draw the shear force and bending moment diagrams for the beam.	L3	CO2	**05**
4.	a.	A beam is simply supported and carries a uniformly distributed load of 40 kN/m run over the whole span. The section of the beam is rectangular having depth as 500 mm. If the maximum stress in the material of the beam is 120 N/mm^2 and moment of inertia of the section is 7×10^8 mm^4, find the span of the beam.	L3	CO3	**05**
		OR			
	b.	A steel plate of width 120 mm and of thickness 20 mm is bent into a circular arc of radius 10 m. Determine the maximum stress induced and the bending moment which will produce the maximum stress. Take E = 2×10^5 N/mm^2.	L3	CO3	**05**
5.	a.	A hollow shaft of external diameter 120 mm transmits 300 kW power at 200 RPM. Determine the maximum internal diameter if the maximum stress in the shaft is not to exceed 60 N/mm^2.	L3	CO4	**05**
		OR			
	b.	Derive section modulus for hollow cylindrical and hollow rectangular sections.	L2	CO4	**05**
6.	a.	subjected to an axial load of 20 kN. Determine the normal and shear stresses on a section which is inclined at an angle of 30° with normal cross-section of the bar.	L3	CO5	**05**
		OR			

	b.	A cylindrical pipe of diameter 1.5 m and thickness 1.5 cm is subjected to an internal fluid pressure of 1.2 N/mm^2. Determine: **i.** Longitudinal stress developed in the pipe, and **ii.** Circumferential stress developed in the pipe.	L3	CO5	**05**
7.	**a.**	Calculate: **i.** the change in diameter. **ii.** change in length. **iii.** change in volume of a thin cylindrical shell 100 cm diameter, 1 cm thick and 5 m long when subjected to internal pressure of 3 N/mm^2. Take the value of E = 2 × 10^5 N/mm^2 and Poisson's ratio, μ = 0.3.	L3	CO5	**05**
		OR			
	b.	A rod is 2 m long at a temperature of 10°C. Find the expansion of the rod, when the temperature is raised to 80°C. If this expansion is prevented, find the stress induced in the material of the rod. Take E = 1.0 × 10^5 MN/m^2 and α =0.000012 per degree centigrade.	L3	CO1	**05**
		PART-C			**6 X 10=60**
8.	**a.**	A member ABCD is subjected to point loads P1, P2, P3 and P4 as shown in figure below. Calculate the force P2 necessary forequilibrium, if P1 = 45 kN, P3 = 450 kN and P4 = 130 kN. Determine the total elongation of the member, assuming the modulus of elasticity to be 2.1 × 10^5 N/mm^2. 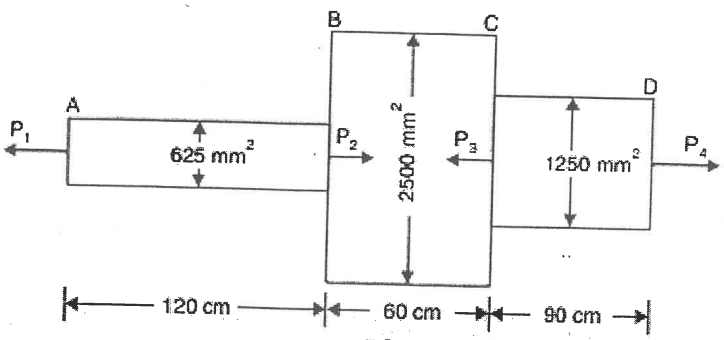 **Figure 8(a)**	L3	CO1	**10**
		OR			

	b.	A metallic bar 300 mm × 100 mm × 40 mm is subjected to a force of 5 kN (tensile), 6 kN (tensile) and 4 kN (tensile) along x, y and z directions respectively. Determine the change in thevolume of the block. Take E = 2×10^5 N/mm^2 and Poisson's ratio = 0.25.	L3	CO1	**10**
9.	**a.**	A cantilever of length 2 m carries a uniformly distributed load of 1.5 kN/m run over the whole length and a point load of 2 kN at a distance of 0.5 m from the free end. Draw the S.F. and B.M. diagrams for the cantilever.	L3	CO2	**10**
		OR			
	b.	A simply supported beam of length 10 m, carries the uniformly distributed load and two point loads as shown in figure below. Draw the S.F. and B.M. diagram for the beam.Also calculate the maximum bending moment. 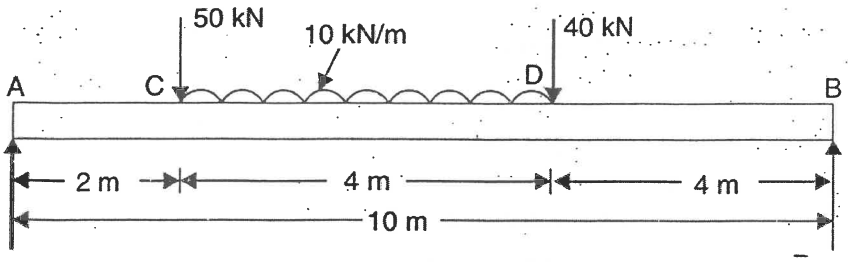 **Figure 9(b)**	L3	CO2	**10**
10.	**a.**	An I-section shown in figure below, is simply supported over aspan of 12 m. If the maximum permissible bending stress is 80 N/mm^2, what concentrated load can be carried at a distance of 4 m from one support?	L3	CO3	**10**

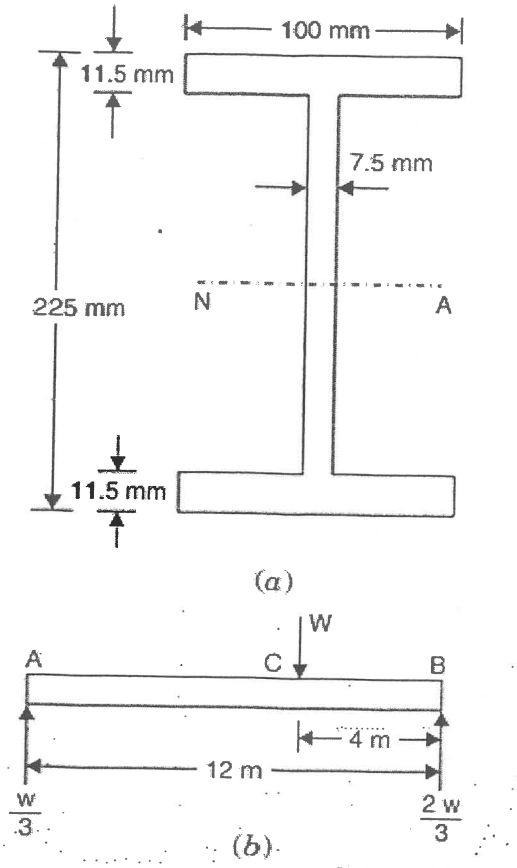

Figure 10(a)

OR

	b.	A rectangular beam 300 mm deep is simply supported over aspan of 4 metres. Determine the uniformly distributed load per metre which the beam may carry, if the bending stress should not exceed 120 N/mm^2. Take I = 8 × 10^6 mm^4.	L3	CO3	**10**
11.	**a.**	A stepped steel shaft shown in figure below, is subjected to a torque of 100 N.m (anticlockwise) at C and another torque of 200 N.m (clockwise) at B. Determine angle of twist at the freeend. Shear stress in the shaft is not to exceed 60 MPa and modulus of rigidity is 84 GPa.	L3	CO4	**10**

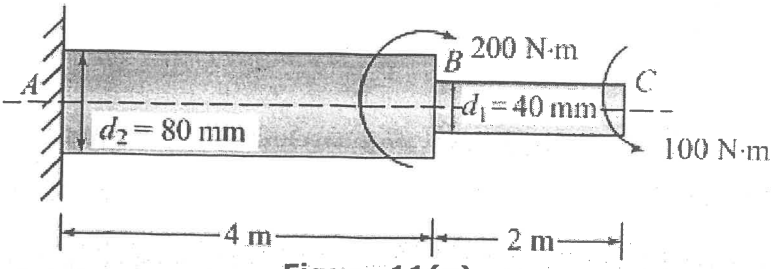

Figure 11(a)

OR

	b.	A hollow shaft is to transmit 300 kW power at 80 r.p.m. If the shear stress is not to exceed 60 N/mm^2 and the internal	L3	CO4	**10**

		diameter is 0.6 of the external diameters, find the external and internal diameters assuming that the maximum torque is 1.4 times the mean.			
12.	**a.**	At a point in a strained material the principal tensile stresses across two perpendicular planes, are 80 N/mm^2 and 40 N/mm^2. Determine normal stress, shear stress and the resultant stress on a plane inclined at 20° with the major principal plane. Determine also the obliquity. What will be the intensity of stress, which acting alone will produce the same maximum strain if Poisson's ratio = ¼.	L3	CO5	**10**
		OR			
	b.	At a certain point in a strained material, the intensities of stresses on two planes at right angles to each other are 20 N/mm^2 and 10 N/mm^2 both tensile. They are accompanied by a shear stress of magnitude 10 N/mm^2. Find graphically or otherwise, the location of principal planes and evaluate the principal stresses.	L3	CO5	**10**
13.	**a.**	A steel rod 5 m long and 30 mm in diameter is subjected to an axial tensile load of 50 kN. Determine the change in length, diameter and volume of the rod. Take E = 2 × 10^5 N/mm^2 and Poisson's ratio = 0.25.	L3	CO1	**10**
		OR			
	b.	Draw the shear force and B.M. diagrams for a simply supported beam of length 8 m and carrying a uniformly distributed load of 10 kN/m for a distance of 4 m as shown in figure below: 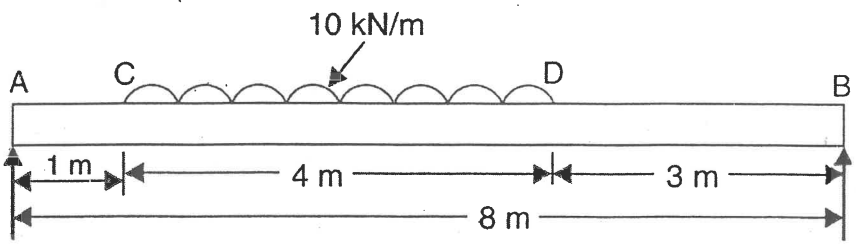 **Figure 13(b)**	L3	CO2	**10**